POWER-LITE®

Certainty at The Speed of Light

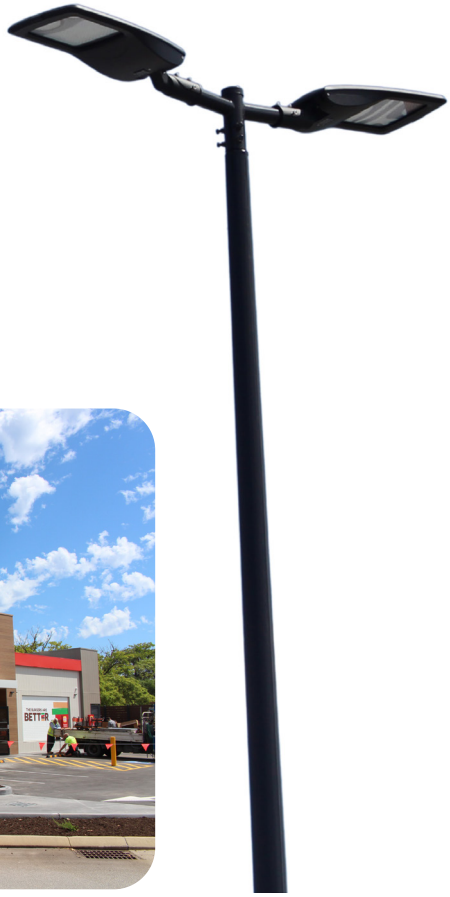

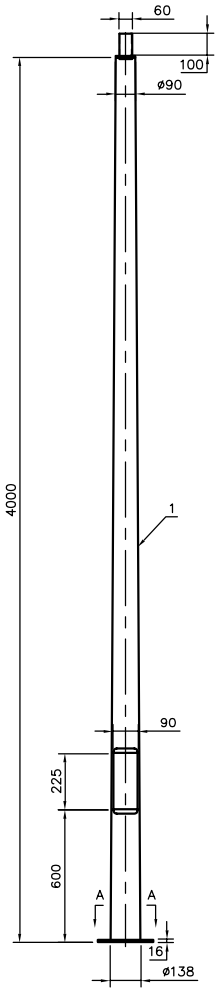

4m TAPERED ROUND
LIGHTING

POLE

PL-POLE-4M-BLACK

Features 1 access door & 60mm dia spigot. Suits entire ST range of POWER-LITE Street Lights.

NEDLANDS GROUP

1800 909 306

nedlandsgroup.com.au

sales@nedlandsgroup.com.au

POWER-LITE®

Certainty at The Speed of Light

DIMENSIONS

Height 4m
Weight 46kg

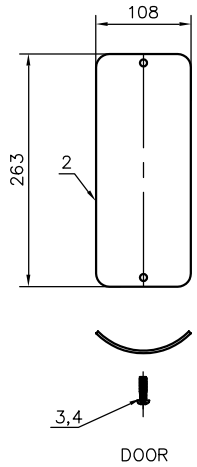

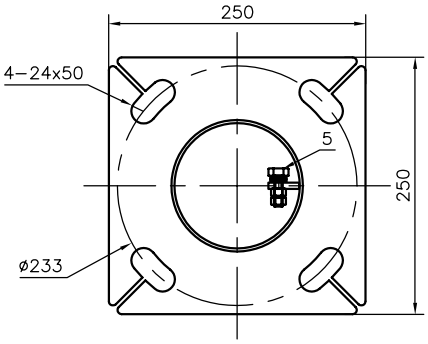

A–A

NOTES:

1. POLES DESIGNED IN ACCORDANCE WITH BCA, AS4100:1998, AS/NZS 1170.2 2002, AS 1798:1992, AS/NZS 4676:2000, AS/NZS 4677:2000.
2. HOT ROLLED STEEL FLAT PRODUCTS TO CONFORM TO AS 1594.
3. HOT ROLLED STEEL BARS AND SECTIONS TO CONFORM TO AS 3679.
4. WELDING OF STEEL STRUCTURES TO CONFORM TO AS/NZS 1554.1:2004.
5. ALL STEEL ITEMS TO BE FULLY HOT DIP GALVANISED AFTER FABRICATION TO AS/NZS 4680:2006.
6. HOT ROLLED STEEL PLATES TO CONFORM TO AS3678.
7. ALL DIMENSIONS ARE IN MILLIMETRES.
8. POLES AND OUTREACHES WILL NEED TO BE ASSEMBLED ON SITE.
9. STANDARD FOUNDATION CAGE HAS BEEN ALLOWED FOR. IT IS RECOMMENDED THAT ENGINEERING CERTIFICATION IS COMPLETED. IT CAN BE PROVIDED BY THIRD PARTY STRUCTURAL ENGINEER AT A COST OF $900 + GST PER POLE TYPE, 1 – 2 WEEKS FROM RECEIVING GEO-TECH REPORT (PROVIDED BY CUSTOMER). PLEASE NOTE ONCE CERTIFICATION HAS BEEN COMPLETED FOUNDATION SIZE AND DESIGN IS SUBJECT TO CHANGE AND MAY RESULT IN AN ADDITIONAL OR REDUCED COST. A & K INVESTMENTS (AUSTRALIA) PTY LTD TAKE NO RESPONSIBILITY FOR THE DESIGN OF POLE FOUNDATIONS AND RECOMMEND THAT ENGINEERING CERTIFICATION BASED ON RELEVANT GEO-TECH REPORTS IS COMPLETED FOR EACH POLE INSTALLATION AND FOUNDATION DESIGN. INSTALLATION / FOUNDATION DESIGN TO BE COMPLETED IN ACCORDANCE WITH THE ENGINEERS DESIGN.

Material
Galvanised Steel

Finish
Black powder coated

Black

ITEM	NAME	DESCRIPTION	MATERIAL	QTY	RAMARK
5	M8X30	2 NUT, 2 WASHER	Cu	1	
4	M8 WASHER	BLACK	PLASTIC	2	FOR ITEM 3
3	M8x25	HEX SOCKET	STAIN	2	WITH FLAT HEAD
2	DOOR	t=3mm	Gr50	1	CUT FROM POLE
1	SECTION	t=3mm	Gr50	1	

ACCESSORIES			CODE
LIGHTING POLE CAGE			PL-POLE-CAGE
LIGHTING POLE CAGE LINER	**Material** Steel	1200mm x 450mm	PL-CAGE-LINER

NEDLANDS GROUP

1800 909 306
nedlandsgroup.com.au
sales@nedlandsgroup.com.au